# Force Transducer
# SB-12-10-1.00

MESSELEKTRONIK GmbH

**article-no: VX34021158**
**serial-no: key 9A**

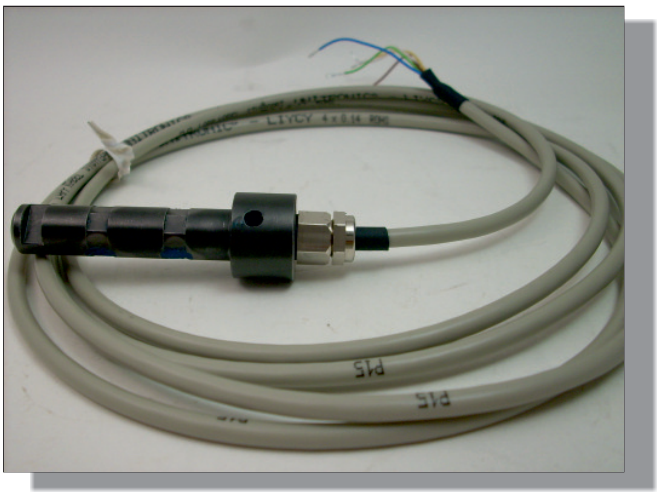

## description

The force transducer works according to the principle of shear force measurement normally to the longitudinal axis.

The force transducer SB-12 was developed especially for force measurement on wheels. It can also be used on deflection rollers, in cranes, conveyor techniques or in elevators.

Construction is a pin with two lateral notches. The transducer is prevented from axial slipping by enlarged pin diameter on one side and securing plates put into the notches.

The strain gauges are protected against mechanical and chemical damages by sealing the application room with a highly elastic compound.

Strain gauges full bridges measure the deformation caused by shear forces on the bolt in the measuring chamber.

The bridges are adjusted in the unloaded state to approx. ±0,01 mV / V.

The transducer SB-12 is designed for connection to an amplifier.

The shield of the cable is not connected with the force transducer.



VELOMAT Messelektronik GmbH . Schwarzer Weg 23b . D-01917 Kamenz
Internet: www.velomat.de
Telefon (03578) 3749-0 . Telefax (03578) 3749-14
E-Mail: velomat@velomat.de

## specification

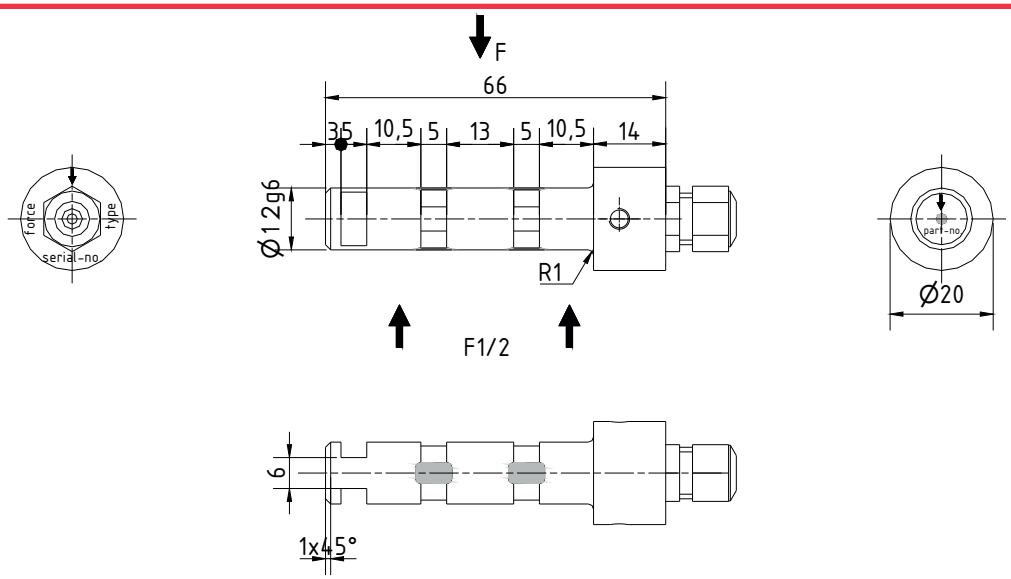


## mechanical execution

**diameter, force transmission and mounting see assembly drawing**

| | |
|---|---|
| **weight** | approx. 0,14 kg |
| **material** | stainless steel |
| **degree of protection** | IP 67 |
| **SB** | **12-10** |
| **nominal force / nominal load** | 10 kN |
| **max. overload range / force limit** | 150 % of nominal force |
| **breaking force** | 300 % of nominal force |

## electrical execution

| | |
|---|---|
| **measuring principle** | wheatstone full bridge of strain gauges |
| **input / output resistance** | 350 Ω / 350 Ω |
| **nominal sensitivity** | approx. 1,4 mV / V (accurate value: see type label / banderole) |
| **excitation voltage** | max. 12 V AC / DC |
| **current consumption** | max. 35 mA |
| **calibration tolerance** | < 0,50 % of final value* |
| **non-linearity** | < 0,25 % of final value* |
| **hysteresis** | < 0,15 % of final value* |
| **temperature coefficient:** | |
| **of zero signal** | ≤ 0,04 % of final value / K |
| **of the sensitivity** | ≤ 0,04 % of set point / K |
| **insulation resistance** | > 5.000 MΩ |
| **nominal temperature range** | -15 °C to +70 °C |
| **operating temperature range** | -25 °C to +80 °C** |

## cable and connection

| | | |
|---|---|---|
| **cable length / cable type** | 2 m LiYCY 4 x 0,14 mm² | |
| **cable end** | tinned | |
| **wiring connections** | brown | excitation voltage $U_S$+ / B+ |
| | green | excitation voltage $U_S$- / B- |
| | yellow | signal $U_D$+ / S+ |
| | white | signal $U_D$- / S- |
| | blue | shielding (only in the case of a shielded cable) |

* These details are depending on the fit, the resistance moment and the installation length. They are reached with favorable values.
** only for the case that the cable is laid with fastening (depending on cable type)
*** This cable should be connected at the operating voltage unless the calibration signal is used. (only applicable to executions with amplifier)