Force Transducer
SKA-40-2t-6.00

MESSELEKTRONIK GmbH

Part no.: VX34021193
serial no.: key 45R

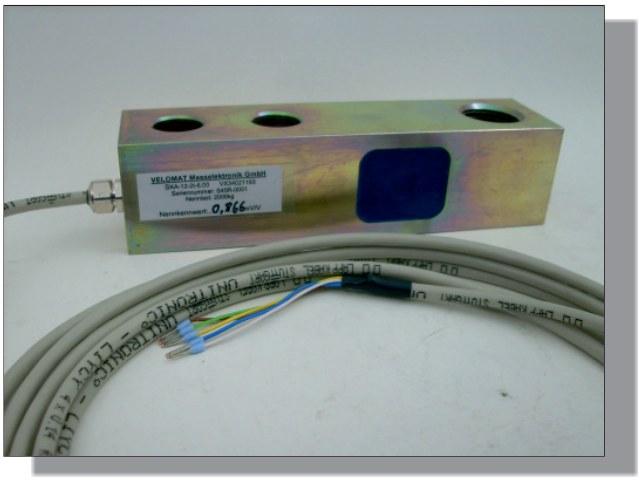

description

The force transducer works according to the principle of shear force measurement normally to the longitudinal axis.

The SKA-40 is suitable for use to band, container, platform and suspension track scales, but also for measuring forces on machine parts, levers, axes etc.

It is constructed as a semi-beam with measuring chambers. The semi-beam shape and two drillings of 19,5 mm diameter permit assembly compatible to mechanical engineering rules. The force introduction is carried out via a thread M24x2.

The strain gauges are protected against mechanical and chemical damages by sealing the application room with a highly elastic compound.

The strain gauge full bridge distributed on the measurement chambers measures the deformation resulting by shear forces on the force transducer.

The bridges are adjusted in the unloaded state to approx. ±0,01 mV / V.

The transducer SKA-40 is designed for connection to an amplifier.

The shield of the cable is not connected with the force transducer.

VELOMAT Messelektronik GmbH . Schwarzer Weg 23b . D-01917 Kamenz
Internet: www.velomat.de
Telefon (03578) 3749-0 . Telefax (03578) 3749-14
E-Mail: velomat@velomat.de

Specification

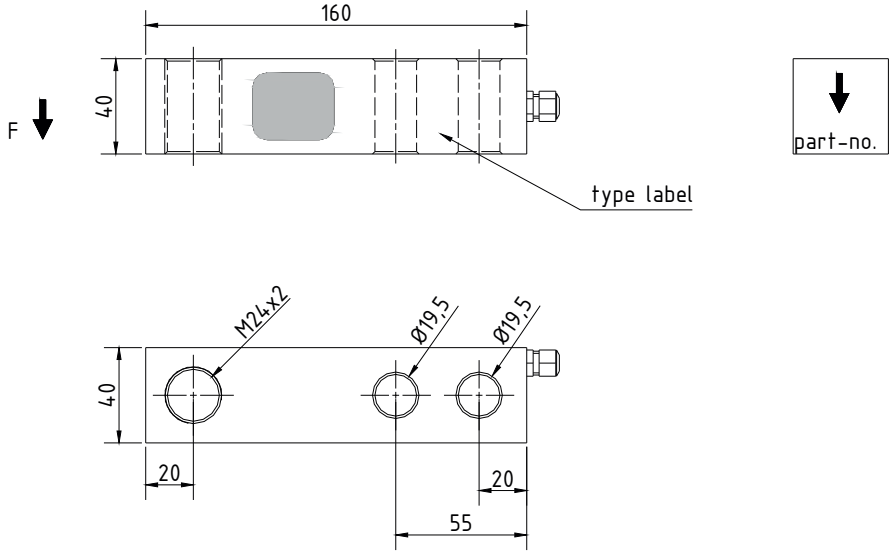

Mechanical Data

diameter, force transmission and mounting see assembly drawing

Weight	approx. 1,6 kg
Material	stainless steel
Degree of protection	IP 67
SKA	**40-2t**
Nominal force / nominal load	2000 kg
max. force of use	150 % of nominal force
Breaking force	400 % of nominal force

Electrical Data

Measuring principle	wheatstone full bridge of strain gauges
Input / output resistance	350 Ω / 350 Ω
Nominal sensitivity	approx. 1 mV / V (accurate value: see type label / banderole)
Excitation voltage	max. 12 V AC / DC
Current consumption	max. 35 mA
Calibration tolerance	< 0,50 % of final value*
Nonlinearity	< 0,25 % of final value*
Hysteresis	< 0,15 % of final value*
Temperature coefficient:	
zero point	≤ 0,04 % of final value / K
Sensitivity	≤ 0,04 % ot set point / K
Insulation resistance	> 5.000 MΩI -15 °C to +70 °C
Nominal temperature range	-25 °C to +80 °C**

Cable and Connection

Cable type / cabel length	PVC screened 4 x 0,14 mm² 3 m	
Cable end	wire-end-sleeve	
Core assignment	brown	excitation voltage U_S+ / B+
	green	excitation voltage U_S- / B-
	yellow	signal U_D+ / S+
	white	signal U_D- / S-
	blue	shielding (only in the case of a shielded cable)

* These details are depending on the fit, the resistance moment and the installation length. They are reached with favorable values.
** only for the case that the cable is laid with fastening (depending on cable type)
*** This cable should be connected at the operating voltage unless the calibration signal is used. (only applicable to executions with amplifier)